## EM 3 E Cod. 98.00092.0

**TAV. 368**

Giugno 00

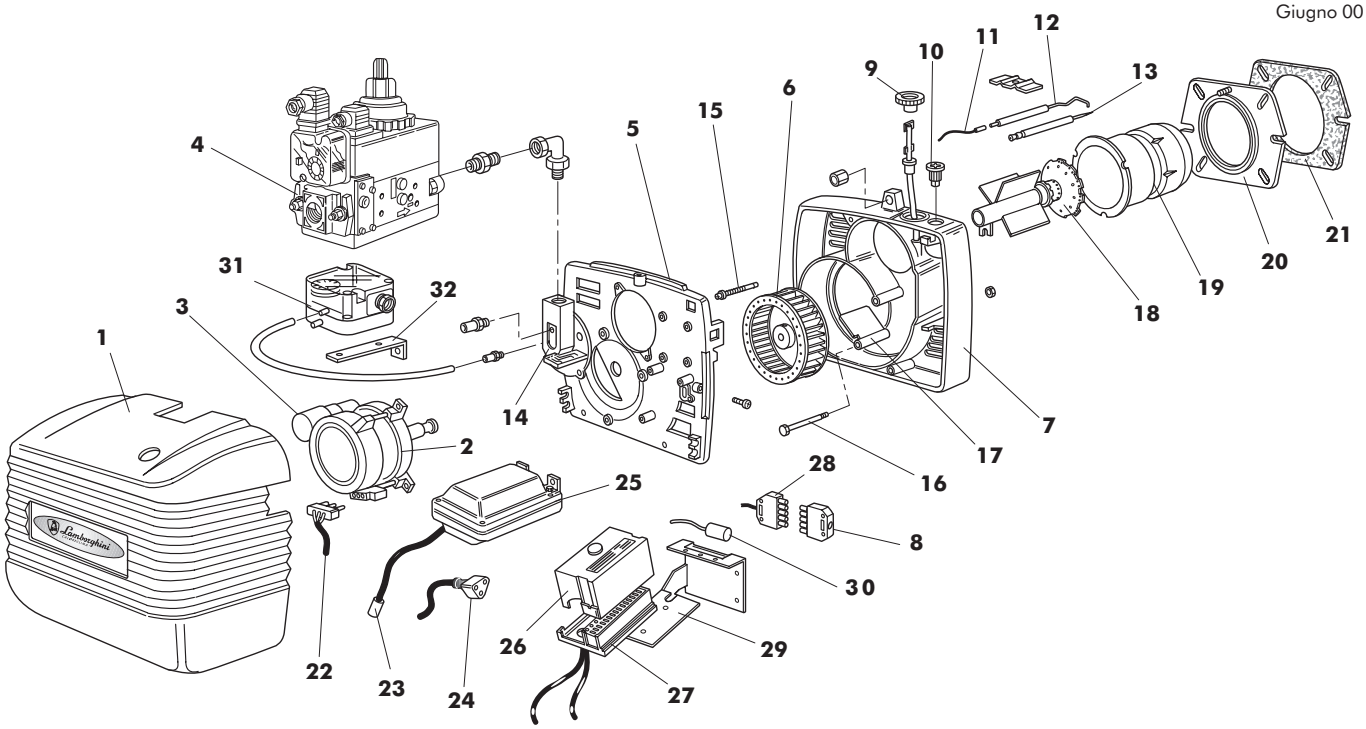


| Pos. | Cod. | Denominazione | *Denomination* | Denomination | *Denominación* |
|---|---|---|---|---|---|
| 1 | 1.10732.0 | Cofano | *Cover* | Capot | *Tapa* |
| 2 | 1.10088.0 | Motore | *Motor* | Moteur | *Motor* |
| 3 | 4.03513.0 | Condensatore | *Condensor* | Condensateur | *Condensador* |
| 4 | 4.03605.0 | V.E. DUNGS BM 771 20-30 mbar | *Gas valve* | Electrovanne | *Electrovalvula* |
| | 4.03607.0 | V.E. DUNGS MB - DLE 403 200 mbar | *Gas valve* | Electrovanne | *Electrovalvula* |
| | 4.03416.0 | V.E. DUNGS MB - DLE 405 360 mbar | *Gas valve* | Electrovanne | *Electrovalvula* |
| 5 | 1.11102.0 | Piastra componenti | *Components plate* | Plaque composantes | *Placa componentes* |
| 6 | 4.03181.0 | Ventola | *Fan* | Ventilateur | *Turbina* |
| 7 | 1.11004.0 | Corpo bruciatore | *Burner body* | Corps brûleur | *Cuerpo quemador* |
| 8 | 4.03434.0 | Connettore | *Burner fixing nut* | Ecrou bloccage brûleur | *Tuerca fijación quemador* |
| 9 | 1.07803.0 | Pignone perno band. | *Pin pinion* | Pignon pivot | *Piñion pernio* |
| 10 | 1.07804.0 | Vite regolazione aria | *Air adjustment screw* | Vis réglage air | *Tornillo de regulación aire* |
| 11 | 1.07010.0 | Cavo elett. di controllo | *Flame rod cable* | Cable électr. de contrôle | *Cable elect. ionisación* |
| 12 | 4.03219.0 | Elettrodo di controllo | *Flame rod* | Elect. ionisation | *Electrodo ionisación* |
| 13 | 4.01851.0 | Elettrodo di accensione | *Ignition electrode* | Elect. d'allumage | *Electrodo d'encendido* |
| 14 | 1.09230.0 | Flangia linea gicleur | *Nozzle line flange* | Flange line gicleur | *Brida linea injector* |
| 15 | 1.08058.0 | Vite regolazione | *Adjustment screw* | Vis réglage | *Tornillo de regulación* |
| 16 | 1.11103.0 | Perno bandella | *Air flap pin* | Pivot du clapet | *Pernio clapeta* |
| 17 | 1.07783.0 | Bandella atmosferica | *Atmospheric air flap* | Clapet d'air atmosphérique | *Palomilla* |
| 18 | 1.09232.0 | G/testata | *Combustion head* | Tête du brûleur | *Cabeza de combustion* |
| 19 | 1.09575.0 | Boccaglio | *Draught tube* | Tube embouchement | *Boca de fuego* |
| 20 | 1.07777.0 | Flangia fissa att. caldaia | *Boiler connecting flange* | Flange connex. chuadière | *Brida de fijación a la caldera* |
| 21 | 1.07785.0 | Guarnizione isolante | *Insulating gasket* | Joint isolant | *Jiunta aislante* |
| 22 | 1.06962.0 | Cavo spina motore | *Motor cable* | Cable du moteur | *Cable motor* |
| 23 | 1.09651.0 | Cavo elettrodo | *Electrode cable* | Cable électrode | *Cable electrodo* |
| 24 | 1.08068.0 | Cavo spina trasformatore | *Transformer cable* | Cable du transformateur | *Cable transformador* |
| 25 | 4.03211.0 | Trasformatore | *Transformer* | Transformateur | *Transformador* |
| 26 | 4.03623.0 | App. LMG 25 | *Control box LMG 25* | Coffret de sécurité LMG 25 | *Programador LMG 25* |
| 27 | 4.01551.0 | Base apparecchiatura | *Control box base* | Base coffret | *Base Programador* |
| 28 | 4.03435.0 | Connettore | *Connector* | G/connecteur | *G/conector multiple* |
| 29 | 1.10724.0 | Staffa apparecchiatura | *Contr.box/connect.holder* | Support coffret/connecteur | *Soporte progr./conector* |
| 30 | 4.03471.0 | Filtro antidisturbo | *Antijamming filter* | Filtre antiparasite | *Filtro antiparasitario* |
| 31 | 4.03414.0 | Pressostato aria | *Air pressure switch* | Pressostat | *Presostato aire* |
| 32 | 1.10614.0 | Staffa pressostato aria | *Air press. switch plate* | Plaque pressostat | *Placa presostato aire* |

PRIMA LINEA