EM 6 Cod. **98.00114.0**

TAV. 414

Agosto 2004

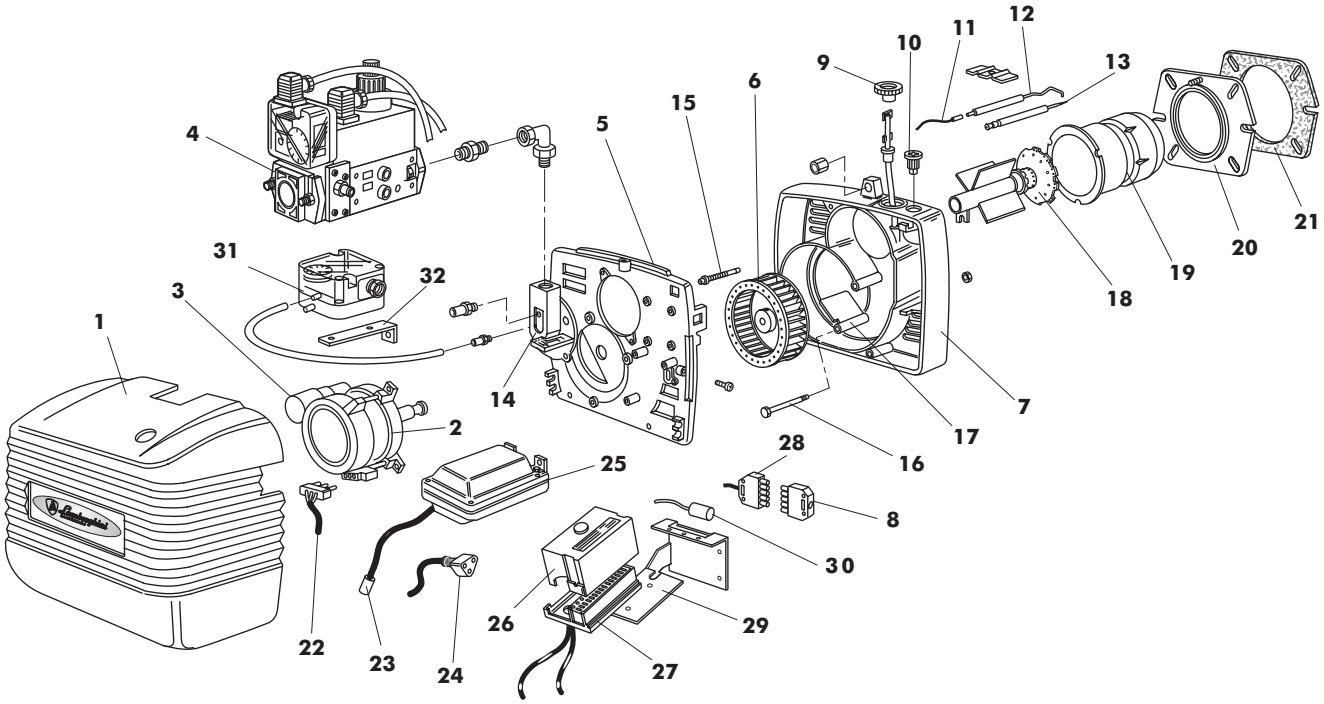

Pos.	Cod.	Denominazione	*Denomination*	Denomination	*Denominación*
1	**1.09234.0**	Cofano	*Cover*	Capot	*Tapa*
2	**1.10088.0**	Motore	*Motor*	Moteur	*Motor*
3	**4.03513.0**	Condensatore	*Condensor*	Condensateur	*Condensador*
4	**4.03605.0**	V.E. DUNGS BM 771.D1	*Gas valve*	Electrovanne	*Electrovalvula*
	4.03245.0	V.E. HONEYWELL VE 4015 .D2	*Gas valve*	Electrovanne	*Electrovalvula*
	4.03624.0	V.E. HONEYWELL VE 4015 AP .D3	*Gas valve*	Electrovanne	*Electrovalvula*
5	**1.11104.0**	Piastra componenti	*Components plate*	Plaque composantes	*Placa componentes*
6	**4.03516.0**	Ventola	*Fan*	Ventilateur	*Turbina*
7	**1.11005.0**	Corpo bruciatore	*Burner body*	Corps brûleur	*Cuerpo quemador*
8	**4.03434.0**	Connettore	*Burner fixing nut*	Ecrou bloccage brûleur	*Tuerca fijación quemador*
9	**1.07803.0**	Pignone perno band.	*Pin pinion*	Pignon pivot	*Piñion pernio*
10	**1.07804.0**	Vite regolazione aria	*Air adjustment screw*	Vis réglage air	*Tornillo de regulación aire*
11	**1.07010.0**	Cavo elett. di controllo	*Flame rod cable*	Cable électr. de contrôle	*Cable elect. ionisación*
12	**4.03219.0**	Elettrodo di controllo	*Flame rod*	Elect. ionisation	*Electrodo ionisación*
13	**4.01851.0**	Elettrodo di accensione	*Ignition electrode*	Elect. d'allumage	*Electrodo d'encendido*
14	**1.09237.0**	Flangia linea gicleur	*Nozzle line flange*	Flange line gicleur	*Brida linea injector*
15	**1.08058.0**	Vite regolazione	*Adjustment screw*	Vis réglage	*Tornillo de regulación*
16	**1.11105.0**	Perno bandella	*Air flap pin*	Pivot du clapet	*Pernio clapeta*
17	**1.08090.0**	Bandella atmosferica	*Atmospheric air flap*	Clapet d'air atmosphérique	*Palomilla*
18	**1.09236.0**	G/testata	*Combustion head*	Tête du brûleur	*Cabeza de combustion*
19	**1.07984.0**	Boccaglio	*Draught tube*	Tube embouchement	*Boca de fuego*
20	**1.07777.0**	Flangia fissa att. caldaia	*Boiler connecting flange*	Flange connex. chuadière	*Brida de fijación a la caldera*
21	**1.07785.0**	Guarnizione isolante	*Insulating gasket*	Joint isolant	*Jiunta aislante*
22	**1.06962.0**	Cavo spina motore	*Motor cable*	Cable du moteur	*Cable motor*
23	**1.09651.0**	Cavo elettrodo	*Electrode cable*	Cable électrode	*Cable electrodo*
24	**1.08068.0**	Cavo spina trasformatore	*Transformer cable*	Cable du transformateur	*Cable transformador*
25	**4.03211.0**	Trasformatore	*Transformer*	Transformateur	*Transformador*
26	**4.03623.0**	App. LMG 25	*Control box LMG 25*	Coffret de sécurité LMG 25	*Programador LMG 25*
27	**4.01551.0**	Base apparecchiatura	*Control box base*	Base coffret	*Base Programador*
28	**4.03435.0**	Connettore	*Connector*	G/connecteur	*G/conector multiple*
29	**1.10724.0**	Staffa apparecchiatura	*Contr.box/connect.holder*	Support coffret/connecteur	*Soporte progr./conector*
30	**4.03471.0**	Filtro antidisturbo	*Antijamming filter*	Filtre antiparasite	*Filtro antiparasitario*
31	**4.03415.0**	Pressostato aria	*Air pressure switch*	Pressostat	*Presostato aire*
32	**1.10614.0**	Staffa pressostato aria	*Air press. switch plate*	Plaque pressostat	*Placa presostato aire*

ST-RR-2004