# ECO 14/2 Cod. 840513

**TAV. 398**

Marzo 2002

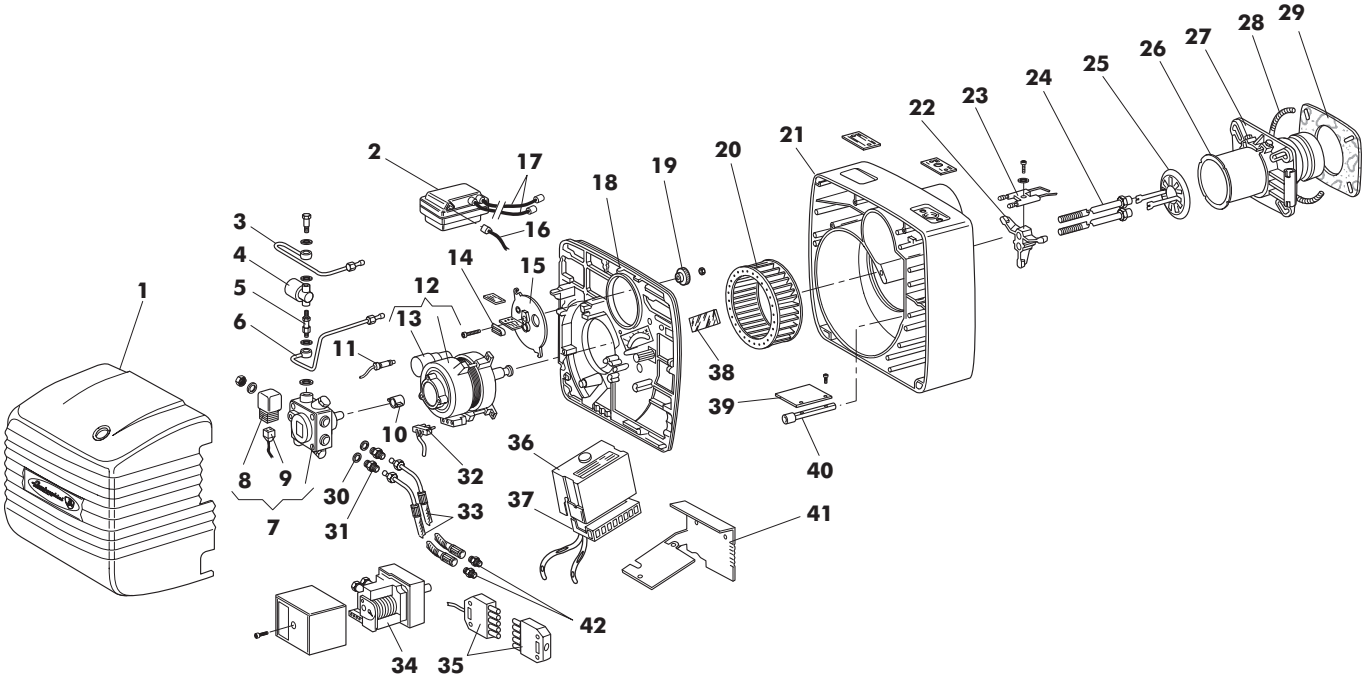


| Pos. | Cod. | Denominazione | Denomination | Denomination | Denominación |
|---|---|---|---|---|---|
| 1 | 1.10652.0 | Cofano | Cover | Capot | Tapa |
| 2 | 4.03343.0 | Trasformatore | Transformer | Transformateur | Transformador |
| 3 | 1.08864.0 | Tubo mandata | Feeding tube | Ligne alimentation | Tubo alimentacion |
| 4 | 4.03338.0 | V.E. Brahma | Main valve | Electrovanne | Electrovalvula |
| 5 | 1.08537.0 | Raccordo 1/8″ | Nipple 1/8″ | Nipple 1/8″ | Machon 1/8″ |
| 6 | 1.08865.0 | Tubo mandata | Feeding tube | Ligne alimentation | Tubo alimentacion |
| 7 | 4.01778.0 | Pompa | Pump | Pompe | Bomba |
| 8 | 4.01870.0 | Bobina | Valve coil | Bobine électrovane | Bobina electrovalvula |
| 9 | 1.06964.0 | Cavo spina valvola | Valve cable | Cable vanne | Cable electrovalvula |
| 10 | 4.03514.0 | Giunto | Joint | Joint | Junta |
| 11 | 4.01234.1 | Fotoresistenza | Photocell | Photorésistance cellule | Fotoresistencia |
| 12 | 1.10958.0 | Motore 150W | Motor 150 W | Moteur 150 W | Motor 150 W |
| 13 | 4.03513.0 | Condensatore | Condensor | Condensateur | Condensador |
| 14 | 1.07780.0 | Indice di riferimento | Reference index | Indéxe de référence | Indice de referencia |
| 15 | 1.08861.0 | Flangia linea gicleur | Nozzle line flange | Flange ligne gicleur | Bride linea inyector |
| 16 | 1.08068.0 | Cavo spina trasformatore | Transformer cable | Cable du transformateur | Cable transformador |
| 17 | 1.08545.0 | Cavo elettrodi | Electrode cable | Cable électrode | Cable electrodo |
| 18 | 1.08955.0 | Piastra componenti | Components plate | Plaque composantes | Placa componentes |
| 19 | 1.07787.0 | Ingranaggio | Gear | Engrenage | Engranaje |
| 20 | 4.03347.0 | Ventola ø 145 x 60 | Fan ø 145 x 60 | Ventilateur ø 145 x 60 | Turbina ø 145 x 60 |
| 21 | 1.08859.0 | Corpo bruciatore | Burner body | Corps du brûleur | Cuerpo quemador |
| 22 | 1.08790.0 | Supporto elettrodi | Electrodes holder | Support èlectrodes | Linea electrodos |
| 23 | 4.03336.0 | G/elettrodi | G/electrodes | G/électrodes | G/electrodos |
| 24 | 1.10308.0 | Suppoprto gicleur | Nozzle holder | Support gicleur | Linea inyector |
| 25 | 1.08874.0 | G/deflettore | G/deflector | G/déflecteur | G/deflector |
| 26 | 1.10306.0 | Boccaglio | Draught tube | Tube embouchement | Boca de fuego |
| 27 | 1.08863.0 | Flangia attacco caldaia | Boiler connecting flange | Flange connex. chaudière | Brida de fijac. a la caldera |
| 28 | 1.08953.0 | Corda isolante | Insulating rope | Corde isolantes | Cuerda aislador |
| 29 | 1.08952.0 | Guarnizione isolante | Insulating gasket | Joint isolant | Jiunta aislante |
| 30 | 1.00129.0 | Rondella 1/4″ | Washer 1/4″ | Rondelle 1/4″ | Arandela 1/4″ |
| 31 | 1.05802.0 | Nipplo 1/4″ | Nipple 1/4″ | Nipple 1/4″ | Machon 1/4″ |
| 32 | 1.06962.0 | Cavo spina motore | Motor cable | Cable du moteur | Cable motor |
| 33 | 1.06922.0 | Flessibile l = 1000 | Hose l = 1000 | Flexible l = 1000 | Flexible l = 1000 |
| 34 | 4.03340.0 | Servocomando | Servo-control | Servomoteur air | Servomando aire |
| 35 | 1.09341.0 | G/presa spine | G/connector | G/connecteur | G/conector multiple |
| 36 | 4.03523.0 | Apparecchiatura LOA 24 | LOA 24 control box | Coffret de sécurité LOA 24 | Programador LOA 24 |
| 37 | 4.01551.0 | Base apparecchiatura | LOA 24 control box base | Base coffret LOA 24 | Base LOA 24 |
| 38 | 1.08951.0 | Vetrino ispezione bandella | Glass | Vojant | Vidrio |
| 39 | 1.08871.0 | Bandella aria | Air flap | Clapet d'air | Palomilla |
| 40 | 1.08872.0 | Albero bandella | Air flap pinion | Pivot clapet d'air | Piñon palomilla |
| 41 | 1.07786.0 | Staffa apparecchiatura | Control box holder | Support coffret | Soporte programador |
| 42 | 1.00119.0 | Nipplo 3/8″ | Nipple 3/8″ | Nipple 3/8″ | Machon 3/8″ |

ST-RR